CORE VALUES | QUALITY PRODUCTS | SUPERIOR SERVICE

CORE® LIFTING PRODUCTS

WEDGE SOCKETS & FAST CONNECTOR SOCKETS

Crosby®

ROPEBLOCK

CoreLifting.com

Crosby®

GUNNEBO® Industries

PRODUCT CATALOG

with application & warning information

Imperial

Crosby

S-421T

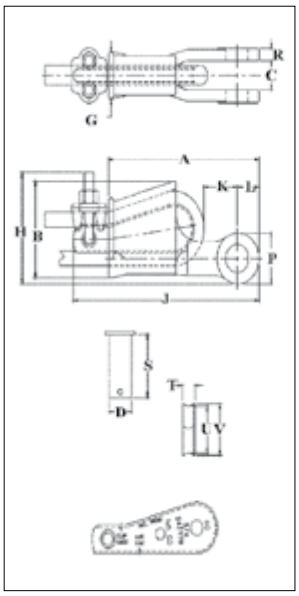

- Wedge socket terminations have an efficiency rating of 80% based on the catalog strength of XXIP wire rope.
- Meets or exceeds all requirements of ASME B30.26, including identification, ductility, design factor, proof load, and temperature requirements. Importantly, these sockets meet other critical performance requirements, including fatigue life, impact properties and material traceability, not addressed by ASME B30.26.
- Type Approval certification in accordance with ABS rules for conditions of classification, Part 1 2017 Steel Vessels and ABS guide for certification of lifting appliances 2017 available. Certificates available when requested at time of order and may include additional charges.
- Basket is cast steel and individually magnetic particle inspected.
- Pin diameter and jaw opening allows wedge and socket to be used in conjunction with closed swage and spelter sockets.
- Secures the tail or dead end of the wire rope to the wedge, thus eliminates loss or punch out of the wedge.
- Eliminates the need for an extra piece of rope and is easily installed.
- The Terminator wedge eliminates the potential breaking off of the tail due to fatigue.
- The tail, which is secured by the base of the clip and the wedge, is left undeformed.
- Incorporates Crosby's patented QUIC-CHECK® 'Go' and 'No-Go' feature cast into the wedge. The proper size rope is determined when the following criteria are met:
  - 1) The wire rope should pass through the 'Go' hole in the wedge.
  - 2) The wire rope should NOT pass through the 'No-Go' hole in the wedge.
- Utilizes standard Crosby Red U-Bolt® wire rope clip.
- Available with bolt, nut, and cotter pin: S-421TB.
- US patent 5,553,360, Canada patent 2,217,004, and foreign equivalents.
- Meets the performance requirements of EN 13411-6.
- Available with API-2C certification upon request.
- Wedge sockets meet the performance requirements of Federal specification RR-S-550F, Type C, except those provisions required of the contractor.
- The S-423T Super Terminator wedge is designed to be assembled only into the Crosby S-421T Terminator socket body. Important: The S-423TW for sizes 5/8" through 1-1/8" (14mm through 28mm) will fit respective size standard Crosby S-421T basket. The 1-1/4" (30-32mm) S-423TW will only fit the Crosby S-421T 1-1/4" basket marked with Terminator.

TA TYPE APPROVED

QUIC-CHECK®

APPLICATION AND WARNING INFORMATION
SECTION 17

S-421T WEDGE SOCKETS (Assembly includes socket, wedge, pin and wire rope clip)

Wire Rope Dia. (in)	Wire Rope Dia. (mm)	Assembly w/ Round Pin Stock No.	Assembly w/ Bolt/Nut/Cotter Stock No.	Weight Each (lb)	Replacement Wedge Stock No.	Replacement Round Pin Kit Stock No.	Replacement Bolt/Nut/cotter Kit Stock No.
3/8	9-10	1035000	1035203	3.30	1035555	1085723	2038971
1/2	11-13	1035009	1035212	6.10	1035564	1085724	2038972
5/8	14-16	1035018	1035221	10.5	1035573	1085725	2038974
3/4	18-19	1035027	1035230	16.4	1035582	1085726	2038976
7/8	20-22	1035036	1035249	24.8	1035591	1085727	2038978
1	24-26	1035045	1035258	35.5	1035600	1085728	2038980
1-1/8	28	1035054	1035267	48.8	1035609	1085729	2038982
1-1/4	30-32	1035063	1035276	71.5	1035618	1085730	2038984

Wire Rope Dia. (in)	Wire Rope Dia. (mm)	Assembly w/ Round Pin Stock No.	Assembly w/ Bolt/Nut/Cotter Stock No.	Dimensions (in)														
				A	B	C +/- .09	D	G	H	J*	K*	L	P	R	S	T	U	V
3/8	9-10	1035000	1035203	5.69	2.72	.81	.81	1.38	3.06	7.80	1.88	.88	1.56	.44	2.13	.44	1.25	1.38
1/2	11-13	1035009	1035212	6.88	3.47	1.00	1.00	1.62	3.76	8.91	1.26	1.06	1.94	.50	2.56	.53	1.75	1.88
5/8	14-16	1035018	1035221	8.25	4.30	1.25	1.19	2.12	4.47	10.75	1.99	1.22	2.25	.56	3.25	.69	2.00	2.19
3/4	18-19	1035027	1035230	9.88	5.12	1.50	1.38	2.44	5.28	12.36	2.41	1.40	2.63	.66	3.63	.78	2.34	2.56
7/8	20-22	1035036	1035249	11.25	5.85	1.75	1.63	2.69	6.16	14.37	2.48	1.67	3.13	.75	4.31	.88	2.69	2.94
1	24-26	1035045	1035258	12.81	6.32	2.00	2.00	2.94	6.96	16.29	3.04	2.00	3.75	.88	4.70	1.03	2.88	3.28
1-1/8	28	1035054	1035267	14.38	6.92	2.25	2.25	3.31	7.62	18.34	2.56	2.25	4.25	1.00	5.44	1.10	3.25	3.56
1-1/4	30-32	1035063	1035276	16.34	8.73	2.62	2.50	3.56	9.39	20.48	2.94	2.34	4.50	1.06	6.13	1.19	4.62	4.94

* Nominal **note:** For intermediate wire rope sizes, use next larger size socket.

© 2025 Kito Crosby. All Rights Reserved.

US-422T

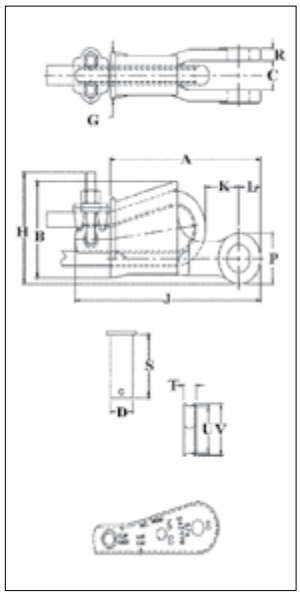

- Wedge socket terminations have an efficiency rating of 80% based on the catalog strength of XXIP wire rope.
- Meets or exceeds all requirements of ASME B30.26, including identification, ductility, design factor, proof load, and temperature requirements. Importantly, these sockets meet other critical performance requirements, including fatigue life, impact properties, and material traceability not addressed by ASME B30.26.
- Basket is cast steel and individually magnetic particle inspected.
- Wedges are color coded for easy identification.
  - Blue - largest wire line size for socket.
  - Black - mid size wire line for socket.
  - 7/16" on US4
  - 9/16" on US5
  - Orange - smallest wire line size for socket.
- By simply changing out the wedge, each socket can be utilized for various wire line sizes (ensure correct wedge is used for wire rope size).
- Cast into each wedge is the model number of the socket and the wire line size for which the wedge is to be used.
- Load pin is forged and headed on one end.
- US-422T wedge sockets contain a hammer pad (lip) to assist in proper securement of termination.
- Incorporates Crosby's patented QUIC-CHECK® 'Go' and 'No-Go' feature cast into the wedge. The proper size rope is determined when the following criteria are met:
- 1) The wire rope should pass through the 'Go' hole in the wedge.
- 2) The wire rope should NOT pass through the 'No-Go' hole in the wedge.
- Available with API-2C certification upon request.
- UWO-422T Wedges are to be used only with the US-422T Wedge Socket Assemblies.

QUIC-CHECK

APPLICATION AND WARNING INFORMATION
SECTION 17

US-422T Utility Wedge Sockets

Model No.	Wire Rope Size (in)	Wire Rope Size (mm)	Stock No.	Weight Each (lb)	Replacement Wedge Stock No. UWO-422T	Replacement Round Pin Kit Stock No. G-4080	Dimensions (in) A	B	C +/- .09	D	G	H	J	K	L	P	R	S	T	U	V
US4T	3/8	10	1044300	4.6	1047310	1085724	6.81	3.55	1.00	1.00	1.63	2.81	8.43	1.38	1.06	1.94	.50	2.53	.44	1.91	2.14
US4T	7/16	11	1044309	4.6	1047301	1085724	6.81	3.55	1.00	1.00	1.63	2.81	8.73	1.08	1.06	1.94	.50	2.53	.53	1.76	1.88
US4T	1/2	13	1044318	4.6	1047329	1085724	6.81	3.55	1.00	1.00	1.63	2.81	8.73	1.02	1.06	1.94	.50	2.53	.53	1.76	1.88
US5T	1/2	13	1044327	8.5	1047338	2022513	9.19	4.23	1.41	1.25	2.13	3.31	11.19	1.84	1.50	3.00	.63	3.25	.75	1.92	2.16
US5T	9/16	14	1044336	8.5	1047347	2022513	9.19	4.23	1.41	1.25	2.13	3.31	11.47	2.40	1.50	3.00	.63	3.25	.69	2.00	2.18
US5T	5/8	16	1044345	8.5	1047356	2022513	9.19	4.23	1.41	1.25	2.13	3.31	11.47	2.34	1.50	3.00	.63	3.25	.69	2.00	2.18
US6T	5/8	16	1044354	9.4	1047365	2022513	9.45	4.70	1.50	1.25	2.24	3.63	11.91	2.48	1.50	3.00	.56	3.25	.88	2.38	2.75
US6T	3/4	19	1044363	9.4	1047374	2022513	9.45	4.70	1.50	1.25	2.24	3.63	11.81	2.03	1.50	3.00	.56	3.25	.88	2.13	2.63
US8AT	5/8	16	1044372	17.5	1047383	2022513	10.59	5.68	1.81	1.63	2.38	5.53	13.19	1.91	1.53	2.88	.75	4.13	.69	3.26	3.50
US8AT	3/4	19	1044381	17.5	1047392	2022513	10.59	5.68	1.81	1.63	2.38	5.84	13.54	2.38	1.53	2.88	.75	4.13	.78	3.12	3.38
US7*	7/8	22	1038580	16.5	1046674	1085727	11.26	5.11	1.31	1.25	2.69	—	—	2.56	1.63	3.26	.66	3.25	1.06	2.12	2.56
US7*	1	25	1038589	16.5	1046683	1085727	11.26	5.11	1.31	1.25	2.69	—	—	2.56	1.63	3.26	.66	3.25	1.06	1.88	2.38
US8T	7/8	22	1044404	20.8	1047425	1085727	12.77	6.96	1.81	1.63	3.06	7.20	16.02	2.87	1.65	3.12	.75	4.13	.88	3.88	4.18
US8T	1	25	1044417	20.8	1047431	1085727	12.77	6.96	1.81	1.63	3.06	7.31	16.41	2.32	1.65	3.12	.75	4.13	1.03	3.76	4.06
US10T	1-1/8	28	1044426	46.5	1047440	1085727	15.94	8.62	1.81	1.63	3.57	9.15	19.72	3.26	2.19	4.38	.75	4.13	1.09	4.76	5.06
US10T	1-1/4	32	1044435	46.5	1047459	1085727	15.94	8.62	1.81	1.63	3.57	9.39	20.22	2.83	2.19	4.38	.75	4.13	1.19	4.62	4.94
US11T	1-1/8	28	1044444	60.6	1047468	1085730	16.34	8.73	2.62	2.50	3.56	9.15	19.97	3.37	2.34	4.50	1.06	6.13	1.09	4.76	5.06
US11T	1-1/4	32	1044453	64.9	1047477	1085730	16.34	8.73	2.62	2.50	3.56	9.39	20.48	2.94	2.34	4.50	1.06	6.13	1.19	4.62	4.94

* Non-Terminator Style.

© 2025 Kito Crosby. All Rights Reserved.

Crosby

S-423T

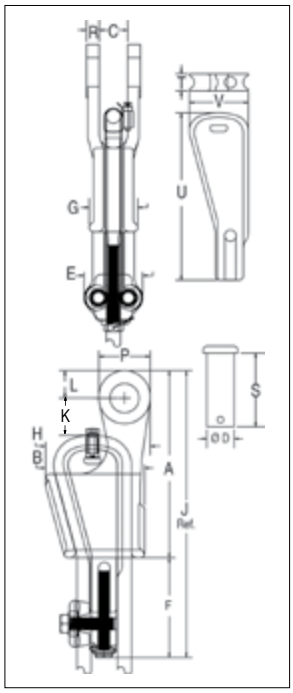

- The 423T wedge socket terminations have a minimum efficiency rating on most high-performance, high-strength, compacted-strand, rotation-resistant wire ropes of 80% based on the catalog breaking strength of the various ropes.
- Design eliminates the difficulty of properly seating the wedge with high performance wire rope into a wedge socket termination.
- Proper application of the Super Terminator eliminates the 'first load' requirement of conventional wedge socket terminations.
- S-423TW Wedge Kit can be retrofitted onto existing Crosby S-421T Terminator Wedge Sockets.
- Wedge and accessories provided with a zinc finish.
- Meets the performance requirements of EN13411-6.
- Meets or exceeds all requirements of ASME B30.26, including identification, ductility, design factor, proof load, and temperature requirements. Importantly, these sockets meet other critical performance requirements, including fatigue life, impact properties, and material traceability not addressed by ASME B30.26.
- Basket is cast steel and individually magnetic particle inspected.
- Pin diameter and jaw opening allows wedge and socket to be used in conjunction with closed swage and spelter sockets.
- Secures the tail or dead end of the wire rope to the wedge, thus eliminates loss or punch out of the wedge.
- Eliminates the need for an extra piece of rope, and is easily installed.
- The Terminator wedge eliminates the potential breaking off of the tail due to fatigue.
- The tail, which is secured by the base of the clip and the tension device, is left undeformed.
- Available with bolt, nut, and cotter pin: S-423TB.
- Available with API-2C certification upon request.
- Wedge sockets meet the performance requirements of Federal Specification RR-S-550F, Type C, except those provisions required of the contractor.
- The S-423T Super Terminator wedge is designed to be assembled only into the Crosby S-421T Terminator socket body. Important: The S-423TW for sizes 5/8" through 1-1/8" will fit respective size standard Crosby S-421T basket. The 1-1/4" S-423TW will only fit the Crosby S-421T 1-1/4" basket marked with Terminator.

Assembly includes socket, wedge, pin, wire rope clip, tensioner, bolts and secondary retention wire.

APPLICATION AND WARNING INFORMATION
SECTION 17

S-423T WEDGE SOCKETS

Wire Rope Dia.		Assembly w/Round Pin Stock No.	Assembly w/Bolt/Nut/Cotter Stock No.	Weight Each	Replacement Wedge Kit Stock No.	Replacement Round Pin Kit Stock No.	Replacement Bolt/Nut/cotter Kit Stock No.
(in)	(mm)	S-423T	S-423TB	(lb)	S-423TW	G-4080	G-4082
5/8	14- 16	1035123	1035218	12.7	1034018	1085725	2038974
3/4	18-19	1035132	1035227	19.4	1034027	1085726	2038976
7/8	20-22	1035141	1035236	28.8	1034036	1085727	2038978
1	24-26	1035150	1035245	39.2	1034045	1085728	2038980
1-1/8	28	1035169	1035254	57.1	1034054	1085729	2038982
1-1/4	30-32	1035178	1035272	88.6	1034063	1085730	2038984

**Kit contains wedge, wire rope clip and bolts, tensioner bolt, and secondary retention wire.

Wire Rope Dia.		S-423T Stock	Dimensions (in)																
(in)	(mm)	No.	A	B	C	D	E	F	G	H	J*	K	L	P	R	S	T	U	V
5/8	14- 16	1035123	8.25	4.50	1.25	1.19	3.00	4.06	2.13	4.61	12.31	1.09	1.22	2.25	.56	3.25	.75	6.88	2.60
3/4	18-19	1035132	9.88	5.20	1.50	1.38	3.25	4.81	2.44	5.37	14.69	1.50	1.40	2.62	.66	3.63	.88	7.65	3.02
7/8	20-22	1035141	11.25	5.88	1.75	1.63	3.81	5.73	2.69	6.16	16.98	1.59	1.67	3.13	.75	4.31	1.00	9.47	3.47
1	24-26	1035150	12.81	6.56	2.00	2.00	3.81	5.73	2.94	7.05	18.54	1.44	2.01	3.75	.88	4.70	1.13	10.41	3.82
1-1/8	28	1035169	14.38	6.94	2.25	2.25	4.00	6.85	3.38	7.81	21.23	1.12	2.26	4.25	1.00	5.44	1.25	11.83	4.22
1-1/4	30-32	1035178	16.34	8.63	2.62	2.50	4.50	7.76	3.57	9.38	24.10	1.50	2.34	4.50	1.06	6.62	1.38	13.87	5.82

* Nominal note: For intermediate wire rope sizes, use next larger size socket.

© 2025 Kito Crosby. All Rights Reserved.

ROPEBLOCK
CATALOG

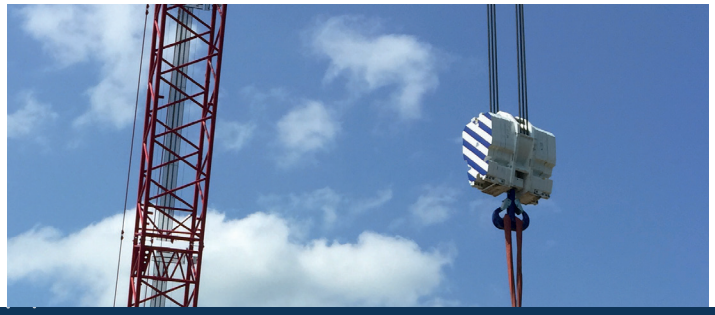

ROPEBLOCK

SOCKETS
OVERVIEW

OPEN SPELTER SOCKETS

Quenched and tempered cast steel range with mechanical values (Charpy-V > 42 Joule / -20°C) for tough and low temperature use. For wire rope diameter 6 - 204 mm (¼" - 8"). Pin secured by cotter pin or bolt, nut and cotter. Optional is a flange connection for use with a bend stiffener. All spelter sockets have a 100% efficiency on wire rope MBL.

PAGES 88 - 89

CLOSED SPELTER SOCKETS

Quenched and tempered cast steel range with mechanical values (Charpy-V > 42 Joule / -20°C) for tough and low temperature use. For wire rope diameter 6 - 204 mm (¼" - 8").
All spelter sockets have a 100% efficiency on wire rope MBL.

PAGE 90

SHORT BOW SOCKETS

The 'ultimate' socket for dynamic loads. Towing lines, anchor lines and chain-rope connections used by major offshore contractors. Quenched and tempered cast steel with extremely high mechanical values for an unmatched weight to MBL ratio. All spelter sockets have a 100% efficiency on wire rope MBL.

PAGE 91

FAST CONNECTOR SOCKETS

Specifically designed for mobile and crawler cranes as an alternative to wedge sockets, but with the benefit of 100% efficiency on the wire rope MBL. This socket meets the respective EN standards.

PAGES 92 - 93

SUPER REEVE CONNECTOR SOCKETS

A revolutionary evolution of the Fast Connector Socket. This socket line has the smallest connector diameter available in the market today, and still meets the respective EN standards. It has been designed to go through the smallest spaces in a crane reeving system. This unique patented design allows refitting by pouring in the field, saving valuable down time compared to swaging techniques.

PAGES 94 - 95

SUPER REEVE CONNECTOR SWIVEL SOCKETS

A revolutionary evolution of the Fast Connector Socket. This socket line has the smallest connector diameter available in the market today, and still meets the respective EN standards. It has been designed to go through the smallest spaces in a crane reeving system. This unique patented design allows refitting by pouring in the field, saving valuable down time compared to swaging techniques.

PAGES 96 - 97

OPEN WEDGE SOCKETS

Quick detachable socket range for wire rope diameter 7 - 86 mm (5⁄16″ - 3⅜″). Basket and wedge in quenched and tempered cast steel. Wedge and basket are designed for easy installation and optimal wire rope efficiency.

PAGES 98 - 99

TAILGRIP OPEN WEDGE SOCKETS

Quick detachable socket range for wire rope diameter 9 - 32 mm (⅜″ - 1¼″). Basket and wedge in quenched and tempered cast steel. Wedge, basket and clip are designed for easy installation and optimal wire rope efficiency.

PAGES 100 -101

CLOSED WEDGE SOCKETS

Quick detachable socket range for wire rope diameter 18 - 86 mm (¾″ - 3¼″). Basket and wedge in quenched and tempered cast steel. Wedge and basket are designed for easy installation and optimal wire rope efficiency.

PAGE 102

FAST CONNECTOR SOCKETS WITH PIN

QUENCHED AND TEMPERED CAST STEEL

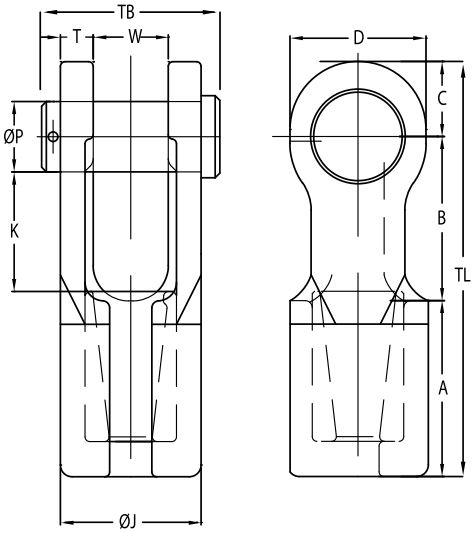

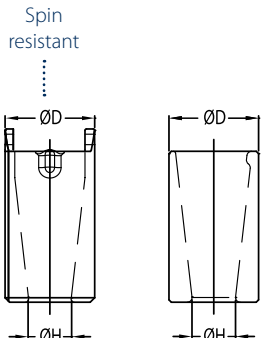

Model No.	Reeving aid	MBL (UStons)	for wire ø		Dimensions (inch)													Weight (lbs)
			(mm)	(inch)	A	B	C	øH	øP	T	W	D	øD	øJ	K	TB	TL	
FCS 701 P	-	22	11-13	7⁄16 - ½	2.44	2.40	1.06	0.59	0.98	0.47	0.98	1.97	1.30	1.93	1.81	2.64	5.91	4
FCS 702 P	-	28	13-16	½ - ⅝	2.83	3.07	1.26	0.71	1.18	0.55	1.26	2.28	1.50	2.36	2.32	3.35	7.17	6
FCS 703 P	-	44	16-19	⅝ - ¾	3.35	3.66	1.57	0.83	1.38	0.63	1.50	2.76	1.77	2.76	2.72	3.74	8.58	10
FCS 704 P	-	61	20-22	⅞	4.02	4.17	1.77	0.94	1.61	0.75	1.73	3.15	1.97	3.23	3.19	4.33	9.96	14
FCS 705 P	-	83	23-26	1	4.53	4.84	2.36	1.10	2.01	0.87	2.01	4.09	2.36	3.74	3.54	5.04	11.73	24
FCS 706 P	-	99	27-29	1⅛	5.51	5.98	2.56	1.26	2.24	0.98	2.24	4.49	2.76	4.21	4.57	5.59	14.06	35
FCS 705 P.SR	T 705	83	23-26	1	4.53	4.84	2.36	1.10	2.01	0.87	2.01	4.09	2.36	3.74	3.54	5.04	11.73	24
FCS 706 P.SR	T 706	99	27-29	1⅛	5.51	5.98	2.56	1.26	2.24	0.98	2.24	4.49	2.76	4.21	4.57	5.59	14.06	35
FCS 707 P.SR	T 706	138	30-32	1¼	5.91	6.26	2.87	1.42	2.48	1.10	2.48	4.96	3.15	4.69	4.72	6.10	15.04	40
FCS 708 P.SR	T 706	138	33-36	1⅜	6.30	6.73	2.87	1.54	2.52	1.10	2.72	4.96	3.35	4.92	5.12	6.30	15.91	51
FCS 709 P.SR	T 709	165	37-39	1½	6.93	7.36	3.15	1.65	2.76	1.18	2.99	5.59	3.54	5.35	5.59	6.97	17.44	64
FCS 710 P.SR	T 709	187	40-42	1⅝	7.40	7.80	3.46	1.77	2.99	1.30	2.99	6.14	3.74	5.59	5.91	7.36	18.66	79
FCS 711 P.SR	T 711	248	43-48	1¾ - 1⅞	8.27	9.13	3.94	2.05	3.50	1.54	3.50	6.93	4.33	6.57	6.89	8.46	21.34	128

MBL = Minimum Breaking Load

- The standard finish of our sockets is blue. Hot dipped galvanized is also available.
- All sockets are provided with an EN 10204-2.1 declaration of conformity, EN 10204-3.1 material certificate and can be provided with a 2006/42/EC declaration where applicable.
- Dimensional tolerances depend on the manufacturing techniques applied and are different between machined components (pins) and cast components (socket bodies and wedges).
- Also surface finish e.g. hot dip galvanizing or even paint may add to the overall thickness and fork distance.
- Please contact Ropeblock for further guidance and a detailed dimensional tolerance sheet.

WARNING
SEE OUR WARNING & SAFETY INFORMATION ON PAGES 134 - 146

Available with Reeving tool (optional)

SEE OUR WARNING AND SAFETY INFORMATION ON PAGE 134

FAST CONNECTOR SOCKETS WITH BOLT AND NUT

QUENCHED AND TEMPERED CAST STEEL

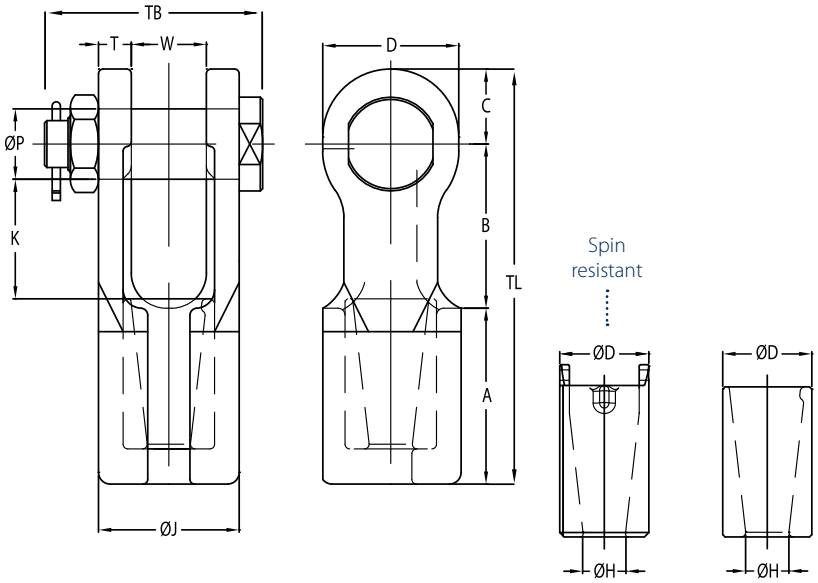

Model No.	Reeving aid	MBL (UStons)	for wire ø		Dimensions (inch)													Weight (lbs)
			(mm)	(inch)	A	B	C	øH	øP	T	W	D	øD	øJ	K	TB	TL	
FCS 701 B	-	22	11-13	7⁄16 - ½	2.44	2.40	1.06	0.59	0.98	0.47	0.98	1.97	1.30	1.93	1.81	3.15	5.91	4
FCS 702 B	-	28	13-16	½ - ⅝	2.83	3.07	1.26	0.71	1.18	0.55	1.26	2.28	1.50	2.36	2.32	3.78	7.17	6
FCS 703 B	-	44	16-19	⅝ - ¾	3.35	3.66	1.57	0.83	1.38	0.63	1.50	2.76	1.77	2.76	2.72	4.21	8.58	10
FCS 704 B	-	61	20-22	⅞	4.02	4.17	1.77	0.94	1.61	0.75	1.73	3.15	1.97	3.23	3.19	4.84	9.96	14
FCS 705 B	-	83	23-26	1	4.53	4.84	2.36	1.10	2.01	0.87	2.01	4.09	2.36	3.74	3.54	5.43	11.73	24
FCS 706 B	-	99	27-29	1⅛	5.51	5.98	2.56	1.26	2.24	0.98	2.24	4.49	2.76	4.21	4.57	6.30	14.06	35
FCS 705 B.SR	T 705	83	23-26	1	4.53	4.84	2.36	1.10	2.01	0.87	2.01	4.09	2.36	3.74	3.54	5.43	11.73	24
FCS 706 B.SR	T 706	99	27-29	1⅛	5.51	5.98	2.56	1.26	2.24	0.98	2.24	4.49	2.76	4.21	4.57	6.30	14.06	35
FCS 707 B.SR	T 706	138	30-32	1¼	5.91	6.26	2.87	1.42	2.48	1.10	2.48	4.96	3.15	4.69	4.72	6.50	15.04	40
FCS 708 B.SR	T 706	138	33-36	1⅜	6.30	6.73	2.87	1.54	2.52	1.10	2.72	4.96	3.35	4.92	5.12	7.28	15.91	51
FCS 709 B.SR	T 709	165	37-39	1½	6.93	7.36	3.15	1.65	2.76	1.18	2.99	5.59	3.54	5.35	5.59	7.91	17.44	64
FCS 710 B.SR	T 709	187	40-42	1⅝	7.40	7.80	3.46	1.77	2.99	1.30	2.99	6.14	3.74	5.59	5.91	8.23	18.66	79
FCS 711 B.SR	T 711	248	43-48	1¾ -1⅞	8.27	9.13	3.94	2.05	3.50	1.54	3.50	6.93	4.33	6.57	6.89	9.33	21.34	128

MBL = Minimum Breaking Load

- The standard finish of our sockets is blue. Hot dipped galvanized is also available.
- All sockets are provided with an EN 10204-2.1 declaration of conformity, EN 10204-3.1 material certificate and can be provided with a 2006/42/EC declaration where applicable.
- Dimensional tolerances depend on the manufacturing techniques applied and are different between machined components (pins) and cast components (socket bodies and wedges).
- Also surface finish e.g. hot dip galvanizing or even paint may add to the overall thickness and fork distance.
- Please contact Ropeblock for further guidance and a detailed dimensional tolerance sheet.

WARNING
SEE OUR WARNING & SAFETY INFORMATION ON PAGES 134 - 146

Available with Reeving tool (optional)

SEE OUR WARNING AND SAFETY INFORMATION ON PAGE 134

SUPER REEVE CONNECTOR SOCKETS WITH PIN

QUENCHED AND TEMPERED CAST STEEL

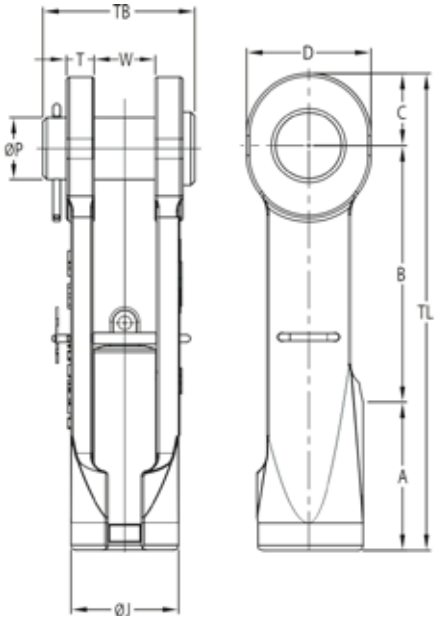

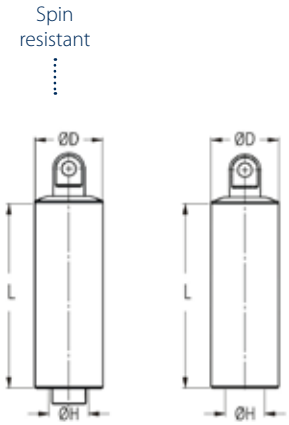

Model No.	MBL (UStons)	for wire ø		Dimensions (inch)													Weight (lbs)
		(mm)	(inch)	A	B	C	øH	øP	T	W	D	øD	øJ	L	TB	TL	
SCS 901 P	22	11-13	7⁄16 - ½	-	-	-	-	-	-	-	-	-	-	-	-	-	-
SCS 902 P	28	13-16	½ - ⅝	3.35	5.24	1.26	0.75	1.18	0.55	1.26	2.28	1.26	2.20	3.86	3.35	9.84	7
SCS 903 P	44	16-19	⅝ - ¾	3.54	6.30	1.57	0.87	1.38	0.63	1.50	2.76	1.57	2.56	4.49	3.74	11.42	11
SCS 904 P	61	20-22	⅞	4.21	7.24	1.77	1.00	1.61	0.75	1.73	3.15	1.73	3.03	5.12	4.33	13.23	17
SCS 905 P	83	23-26	1	4.53	8.31	2.36	1.20	1.97	0.87	2.01	4.09	2.05	3.46	5.59	5.04	15.20	26
SCS 906 P	99	27-29	1⅛	5.51	8.46	2.56	1.34	2.24	0.98	2.24	4.49	2.28	3.78	6.26	5.59	16.54	35
SCS 907 P	138	30-32	1¼	5.91	10.24	2.87	1.43	2.48	1.10	2.48	4.96	2.52	4.33	6.97	6.10	19.02	51
SCS 908 P	138	33-36	1⅜	6.69	10.24	2.87	1.56	2.52	1.10	2.72	4.96	2.68	4.49	7.76	6.30	19.80	55
SCS 902 P.SR	28	13-16	½ - ⅝	3.35	5.24	1.26	0.75	1.18	0.55	1.26	2.28	1.26	2.20	3.86	3.35	9.84	7
SCS 903 P.SR	44	16-19	⅝ - ¾	3.54	6.30	1.57	0.87	1.38	0.63	1.50	2.76	1.57	2.56	4.49	3.74	11.42	11
SCS 904 P.SR	61	20-22	⅞	4.21	7.24	1.77	1.00	1.61	0.75	1.73	3.15	1.73	3.03	5.12	4.33	13.23	17
SCS 905 P.SR	83	23-26	1	4.53	8.31	2.36	1.20	1.97	0.87	2.01	4.09	2.05	3.46	5.59	5.04	15.20	26
SCS 906 P.SR	99	27-29	1⅛	5.51	8.46	2.56	1.34	2.24	0.98	2.24	4.49	2.28	3.78	6.26	5.59	16.54	35
SCS 907 P.SR	138	30-32	1¼	5.91	10.24	2.87	1.43	2.48	1.10	2.48	4.96	2.52	4.33	6.97	6.10	19.02	51
SCS 908 P.SR	138	33-36	1⅜	6.69	10.24	2.87	1.56	2.52	1.10	2.72	4.96	2.68	4.49	7.76	6.30	19.80	55
SCS 909 P.SR	165	37-39	1½	-	-	-	-	-	-	-	-	-	-	-	-	-	-
SCS 910 P.SR	187	40-42	1⅝	-	-	-	-	-	-	-	-	-	-	-	-	-	-
SCS 911 P.SR	248	43-48	1¾ -1⅞	-	-	-	-	-	-	-	-	-	-	-	-	-	-
SCS 912 P.SR	309	49-54	2 - 2⅛	8.86	14.69	4.25	2.36	3.74	1.77	3.98	7.64	4.13	7.28	11.02	9.61	27.80	205

MBL = Minimum Breaking Load

- The standard finish of our sockets is blue. Hot dipped galvanized is also available.
- All sockets are provided with an EN 10204-2.1 declaration of conformity, EN 10204-3.1 material certificate and can be provided with a 2006/42/EC declaration where applicable.
- Dimensional tolerances depend on the manufacturing techniques applied and are different between machined components (pins) and cast components (socket bodies and wedges).
- Also surface finish e.g. hot dip galvanizing or even paint may add to the overall thickness and fork distance.
- Please contact Ropeblock for further guidance and a detailed dimensional tolerance sheet.

WARNING
SEE OUR WARNING & SAFETY INFORMATION ON PAGES 134 - 146

SEE OUR WARNING AND SAFETY INFORMATION ON PAGE 134

SUPER REEVE CONNECTOR SOCKET WITH BOLT AND NUT

QUENCHED AND TEMPERED CAST STEEL

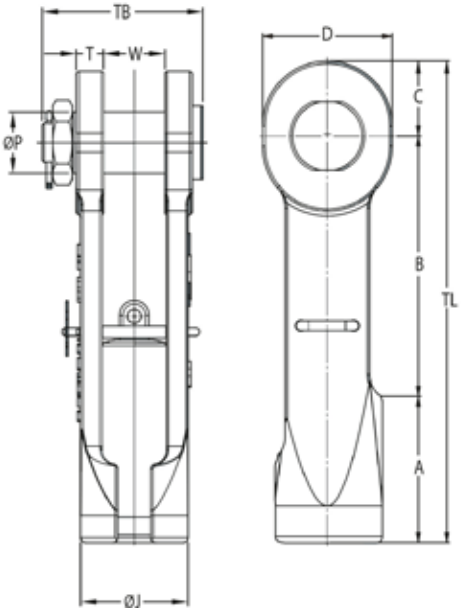

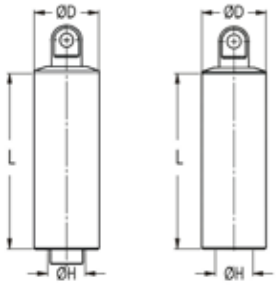

Model No.	MBL (UStons)	for wire ø		Dimensions (inch)													Weight (lbs)
		(mm)	(inch)	A	B	C	øH	øP	T	W	D	øD	øJ	L	TB	TL	
SCS 901 B	22	11-13	7⁄16 - ½	-	-	-	-	-	-	-	-	-	-	-	-	-	-
SCS 902 B	28	13-16	½ - ⅝	3.35	5.24	1.26	0.75	1.18	0.55	1.26	2.28	1.26	2.20	3.86	3.78	9.84	7
SCS 903 B	44	16-19	⅝ - ¾	3.54	6.30	1.57	0.87	1.38	0.63	1.50	2.76	1.57	2.56	4.49	4.21	11.42	11
SCS 904 B	61	20-22	⅞	4.21	7.24	1.77	1.00	1.61	0.75	1.73	3.15	1.73	3.03	5.12	4.84	13.23	17
SCS 905 B	83	23-26	1	4.53	8.31	2.36	1.20	1.97	0.87	2.01	4.09	2.05	3.46	5.59	5.43	15.20	26
SCS 906 B	99	27-29	1⅛	5.51	8.46	2.56	1.34	2.24	0.98	2.24	4.49	2.28	3.78	6.26	6.30	16.54	35
SCS 907 B	138	30-32	1¼	5.91	10.24	2.87	1.43	2.48	1.10	2.48	4.96	2.52	4.33	6.97	6.50	19.02	51
SCS 908 B	138	33-36	1⅜	6.69	10.24	2.87	1.56	2.52	1.10	2.72	4.96	2.68	4.49	7.76	7.28	19.80	55
SCS 902 B.SR	28	13-16	½ - ⅝	3.35	5.24	1.26	0.75	1.18	0.55	1.26	2.28	1.26	2.20	3.86	3.78	9.84	7
SCS 903 B.SR	44	16-19	⅝ - ¾	3.54	6.30	1.57	0.87	1.38	0.63	1.50	2.76	1.57	2.56	4.49	4.21	11.42	11
SCS 904 B.SR	61	20-22	⅞	4.21	7.24	1.77	1.00	1.61	0.75	1.73	3.15	1.73	3.03	5.12	4.84	13.23	17
SCS 905 B.SR	83	23-26	1	4.53	8.31	2.36	1.20	1.97	0.87	2.01	4.09	2.05	3.46	5.59	5.43	15.20	26
SCS 906 B.SR	99	27-29	1⅛	5.51	8.46	2.56	1.34	2.24	0.98	2.24	4.49	2.28	3.78	6.26	6.30	16.54	35
SCS 907 B.SR	138	30-32	1¼	5.91	10.24	2.87	1.43	2.48	1.10	2.48	4.96	2.52	4.33	6.97	6.50	19.02	51
SCS 908 B.SR	138	33-36	1⅜	6.69	10.24	2.87	1.56	2.52	1.10	2.72	4.96	2.68	4.49	7.76	7.28	19.80	55
SCS 909 B.SR	165	37-39	1½	-	-	-	-	-	-	-	-	-	-	-	-	-	-
SCS 910 B.SR	187	40-42	1⅝	-	-	-	-	-	-	-	-	-	-	-	-	-	-
SCS 911 B.SR	248	43-48	1¾ - 1⅞	-	-	-	-	-	-	-	-	-	-	-	-	-	-
SCS 912 B.SR	309	49-54	2 - 2⅛	8.86	14.69	4.25	2.36	3.74	1.77	3.98	7.64	4.13	7.28	11.02	10.35	27.80	205

MBL = Minimum Breaking Load

- The standard finish of our sockets is blue. Hot dipped galvanized is also available.
- All sockets are provided with an EN 10204-2.1 declaration of conformity, EN 10204-3.1 material certificate and can be provided with a 2006/42/EC declaration where applicable.
- Dimensional tolerances depend on the manufacturing techniques applied and are different between machined components (pins) and cast components (socket bodies and wedges).
- Also surface finish e.g. hot dip galvanizing or even paint may add to the overall thickness and fork distance.
- Please contact Ropeblock for further guidance and a detailed dimensional tolerance sheet.

WARNING
SEE OUR WARNING & SAFETY INFORMATION ON PAGES 134 - 146

SEE OUR WARNING AND SAFETY INFORMATION ON PAGE 134

SUPER REEVE CONNECTOR SWIVEL SOCKETS WITH PIN

QUENCHED AND TEMPERED CAST STEEL

PATENTED

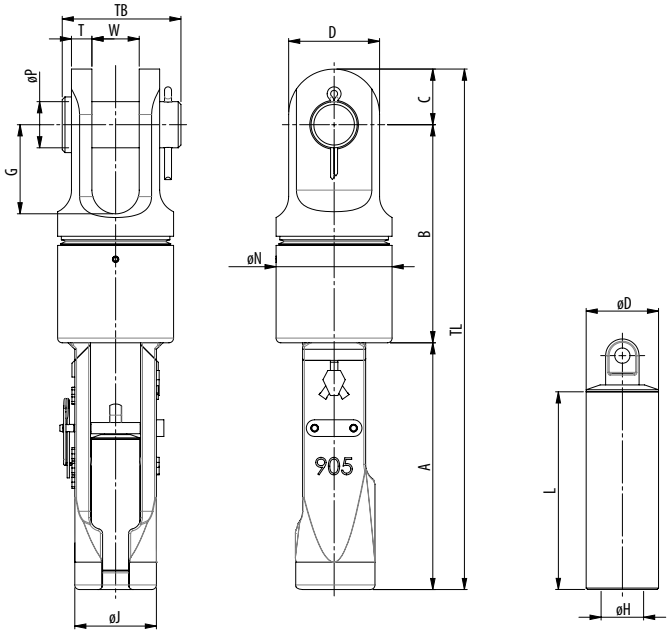

Model No.	MBL (UStons)	for wire ø		Dimensions (inch)															Weight (lbs)
		(mm)	(inch)	A	B	C	øH	øP	T	W	G	D	øD	øJ	øN	L	TB	TL	
SCS-SW 902 P	28	13-16	½ - ⅝	7.17	6.18	1.26	0.75	1.18	0.55	1.26	2.36	2.28	1.26	2.20	2.99	3.86	3.35	14.61	15
SCS-SW 903 P	44	16-19	⅝ - ¾	8.19	7.32	1.57	0.87	1.38	0.63	1.50	2.76	2.76	1.57	2.56	3.66	4.49	3.74	17.09	24
SCS-SW 904 P	61	20-22	⅞	9.37	8.19	1.77	1.00	1.61	0.75	1.73	3.15	3.15	1.73	3.03	4.13	5.12	4.33	19.33	37
SCS-SW 905 P	83	23-26	1	10.47	9.25	2.36	1.20	1.97	0.87	2.01	3.78	3.86	2.05	3.46	4.92	5.59	5.04	22.09	57
SCS-SW 906 P	99	27-29	1⅛	11.42	10.31	2.56	1.34	2.24	0.98	2.24	4.21	4.25	2.28	3.78	5.31	6.26	5.59	24.29	75
SCS-SW 907 P	138	30-32	1¼	12.87	11.50	2.87	1.43	2.48	1.10	2.48	4.65	4.72	2.52	4.33	5.91	6.97	6.10	27.24	108

MBL = Minimum Breaking Load

- The standard finish of these sockets is hot dipped galvanized.
- All sockets are provided with an EN 10204-2.1 declaration of conformity, EN 10204-3.1 material certificate and can be provided with a 2006/42/EC declaration where applicable.
- Dimensional tolerances depend on the manufacturing techniques applied and are different between machined components (pins) and cast components (socket bodies and wedges).
- Also surface finish e.g. hot dip galvanizing may add to the overall thickness and fork distance.
- Please contact Ropeblock for further guidance and a detailed dimensional tolerance sheet.

WARNING
SEE OUR WARNING & SAFETY INFORMATION ON PAGES 134 - 146

SEE OUR WARNING AND SAFETY INFORMATION ON PAGE 134

SUPER REEVE CONNECTOR SWIVEL SOCKETS WITH BOLT AND NUT

QUENCHED AND TEMPERED CAST STEEL

PATENTED

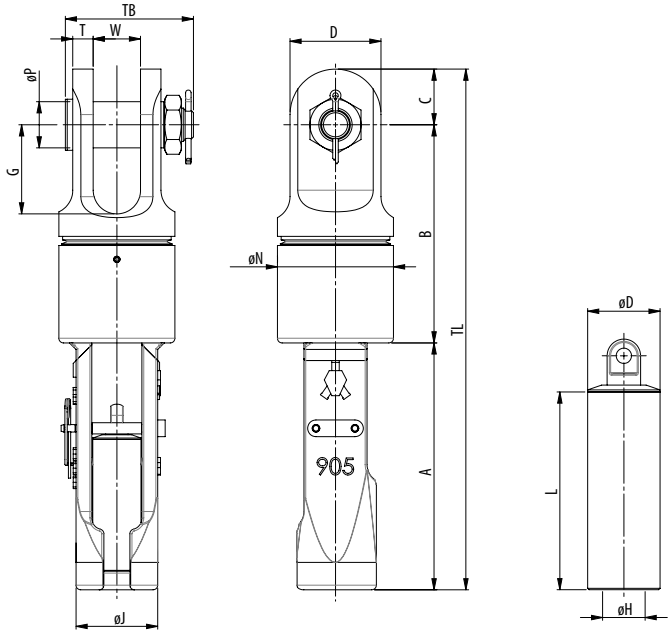

Model No.	MBL (UStons)	for wire ø		Dimensions (inch)															Weight (lbs)
		(mm)	(inch)	A	B	C	øH	øP	T	W	G	D	øD	øJ	øN	L	TB	TL	
SCS-SW 902 B	28	13-16	½ - ⅝	7.17	6.18	1.26	0.75	1.18	0.55	1.26	2.36	2.28	1.26	2.20	2.99	3.86	3.78	14.61	15
SCS-SW 903 B	44	16-19	⅝ - ¾	8.19	7.32	1.57	0.87	1.38	0.63	1.50	2.76	2.76	1.57	2.56	3.66	4.49	4.21	17.09	24
SCS-SW 904 B	61	20-22	⅞	9.37	8.19	1.77	1.00	1.61	0.75	1.73	3.15	3.15	1.73	3.03	4.13	5.12	4.84	19.33	37
SCS-SW 905 B	83	23-26	1	10.47	9.25	2.36	1.20	1.97	0.87	2.01	3.78	3.86	2.05	3.46	4.92	5.59	5.43	22.09	57
SCS-SW 906 B	99	27-29	1⅛	11.42	10.31	2.56	1.34	2.24	0.98	2.24	4.21	4.25	2.28	3.78	5.31	6.26	6.30	24.29	75
SCS-SW 907 B	138	30-32	1¼	12.87	11.50	2.87	1.43	2.48	1.10	2.48	4.65	4.72	2.52	4.33	5.91	6.97	6.50	27.24	108

MBL = Minimum Breaking Load

- The standard finish of these sockets is hot dipped galvanized.
- All sockets are provided with an EN 10204-2.1 declaration of conformity, EN 10204-3.1 material certificate and can be provided with a 2006/42/EC declaration where applicable.
- Dimensional tolerances depend on the manufacturing techniques applied and are different between machined components (pins) and cast components (socket bodies and wedges).
- Also surface finish e.g. hot dip galvanizing may add to the overall thickness and fork distance.
- Please contact Ropeblock for further guidance and a detailed dimensional tolerance sheet.

WARNING
SEE OUR WARNING & SAFETY INFORMATION ON PAGES 134 - 146

SEE OUR WARNING AND SAFETY INFORMATION ON PAGE 134

OPEN WEDGE SOCKETS WITH PIN

QUENCHED AND TEMPERED CAST STEEL

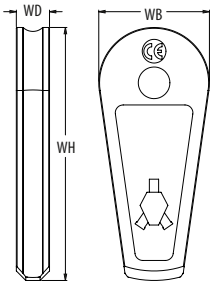

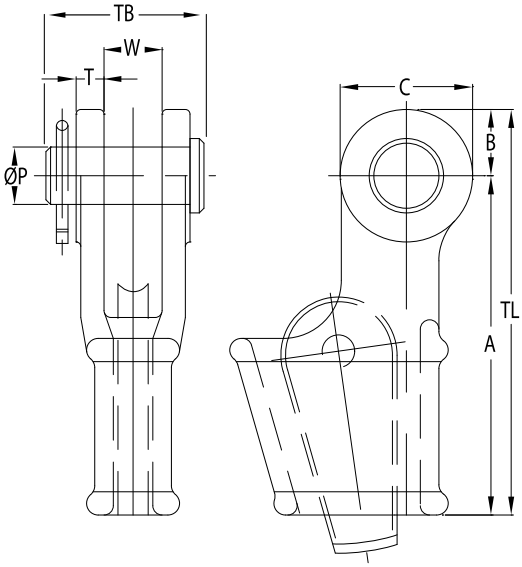

Model No.	MBL (UStons)	for wire ø		Dimensions (inch)											Weight (lbs)
		(mm)	(inch)	A	B	C	øP	T	TL	TB	W	WH	WB	WD	
OWS 0.25 P	9	7-8	5⁄16	4.33	0.71	1.42	0.63	0.35	5.04	2.01	0.71	2.74	1.38	0.33	2
OWS 0.5 P	13	9-10	3⁄8	5.71	0.91	1.81	0.81	0.43	6.61	2.48	0.81	2.91	1.42	0.47	4
OWS 1 P	22	11-13	1⁄2	5.75	1.12	2.24	0.98	0.47	6.87	2.64	0.98	4.53	1.89	0.55	5
OWS 2 P	28	14-16	5⁄8	6.93	1.38	2.76	1.18	0.59	8.31	3.35	1.22	5.30	2.24	0.71	9
OWS 3 P	44	18-19	3⁄4	8.27	1.57	3.15	1.38	0.63	9.84	3.74	1.50	6.30	2.76	0.83	15
OWS 4 P	61	20-22	7⁄8	9.35	1.87	3.74	1.61	0.71	11.22	4.33	1.73	7.34	3.03	0.94	22
OWS 5 P	83	23-26	1	10.83	2.17	4.33	2.01	0.87	12.99	5.04	2.01	8.33	3.27	1.08	33
OWS 6 P	99	27-29	1⅛	12.20	2.56	5.12	2.24	0.98	14.76	5.59	2.24	9.11	3.58	1.18	46
OWS 7 P	121	30-32	1¼	13.78	2.87	5.75	2.48	1.10	16.65	6.10	2.48	10.47	4.25	1.30	68
OWS 8 P	138	34-36	1⅜	15.75	2.91	5.83	2.52	1.10	18.66	6.30	2.76	11.73	4.57	1.38	82
OWS 9 P	165	37-39	1½	17.72	3.15	5.59	2.76	1.18	20.87	6.97	3.03	13.31	5.12	1.50	112
OWS 10 P	187	40-42	1⅝	19.69	3.43	6.30	2.99	1.30	23.11	7.36	2.99	14.67	5.51	1.61	141
OWS 11 P	248	43-48	1¾ - 1⅞	21.65	3.94	7.32	3.50	1.54	25.59	8.46	3.50	16.06	5.75	1.89	212
OWS 12 P	309	49-52	2	25.20	4.13	8.07	3.74	1.81	29.33	9.61	3.98	17.72	6.30	2.09	287
OWS 13 P	397	54-58	2¼	25.98	4.92	9.84	4.25	2.13	30.91	10.83	4.49	18.50	6.61	2.28	397
OWS 14 P	468	60-68	2½	32.87	5.31	10.63	4.76	2.36	38.19	11.81	5.00	19.69	6.93	2.56	606
OWS 15 P	507	72-76	3	39.37	5.91	11.81	5.24	2.99	45.28	13.98	5.75	21.65	9.61	2.76	970
OWS 16 P	689	81-86	3¼ - 3⅜	43.31	5.91	11.81	5.51	3.11	49.21	14.76	6.26	26.38	10.24	3.15	1124

MBL = Minimum Breaking Load

- The standard finish of our sockets is blue. Hot dipped galvanized is also available.
- All sockets are provided with an EN 10204-2.1 declaration of conformity, EN 10204-3.1 material certificate and can be provided with a 2006/42/EC declaration where applicable.
- Dimensional tolerances depend on the manufacturing techniques applied and are different between machined components (pins) and cast components (socket bodies and wedges).
- Also surface finish e.g. hot dip galvanizing or even paint may add to the overall thickness and fork distance.
- Please contact Ropeblock for further guidance and a detailed dimensional tolerance sheet.

WARNING
SEE OUR WARNING & SAFETY INFORMATION ON PAGES 134 - 146

SEE OUR WARNING AND SAFETY INFORMATION ON PAGE 134

OPEN WEDGE SOCKETS WITH BOLT AND NUT

QUENCHED AND TEMPERED CAST STEEL

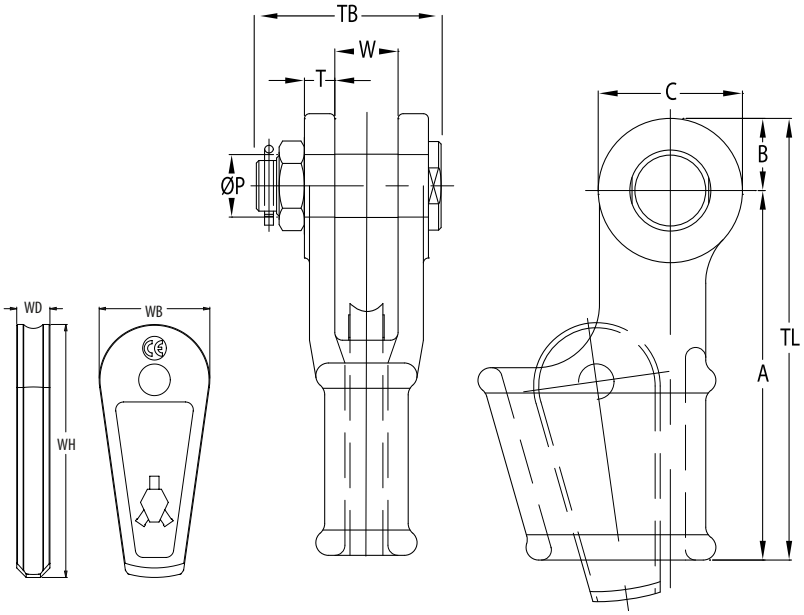

Model No.	MBL (UStons)	for wire ø		Dimensions (inch)											Weight (lbs)
		(mm)	(inch)	A	B	C	øP	T	TL	TB	W	WH	WB	WD	
OWS 0.25 B	9	7-8	5⁄16	4.33	0.71	1.42	0.63	0.35	5.04	2.44	0.71	2.74	1.38	0.33	2
OWS 0.5 B	13	9-10	3⁄8	5.71	0.91	1.81	0.81	0.43	6.61	2.95	0.81	2.91	1.42	0.47	4
OWS 1 B	22	11-13	1⁄2	5.75	1.12	2.24	0.98	0.47	6.87	3.15	0.98	4.53	1.89	0.55	5
OWS 2 B	28	14-16	5⁄8	6.93	1.38	2.76	1.18	0.59	8.31	3.78	1.22	5.30	2.24	0.71	9
OWS 3 B	44	18-19	3⁄4	8.27	1.57	3.15	1.38	0.63	9.84	4.21	1.50	6.30	2.76	0.83	15
OWS 4 B	61	20-22	7⁄8	9.35	1.87	3.74	1.61	0.71	11.22	4.84	1.73	7.34	3.03	0.94	22
OWS 5 B	83	23-26	1	10.83	2.17	4.33	2.01	0.87	12.99	5.43	2.01	8.33	3.27	1.08	33
OWS 6 B	99	27-29	1 1/8	12.20	2.56	5.12	2.24	0.98	14.76	6.30	2.24	9.11	3.58	1.18	46
OWS 7 B	121	30-32	1 1/4	13.78	2.87	5.75	2.48	1.10	16.65	6.50	2.48	10.47	4.25	1.30	68
OWS 8 B	138	34-36	1 3/8	15.75	2.91	5.83	2.52	1.10	18.66	7.28	2.76	11.73	4.57	1.38	82
OWS 9 B	165	37-39	1 1/2	17.72	3.15	5.59	2.76	1.18	20.87	7.91	3.03	13.31	5.12	1.50	112
OWS 10 B	187	40-42	1 5/8	19.69	3.43	6.30	2.99	1.30	23.11	8.23	2.99	14.67	5.51	1.61	141
OWS 11 B	248	43-48	1 3/4 - 1	21.65	3.94	7.32	3.50	1.54	25.59	9.33	3.50	16.06	5.75	1.89	212
OWS 12 B	309	49-52	2	25.20	4.13	8.07	3.74	1.81	29.33	10.35	3.98	17.72	6.30	2.09	287
OWS 13 B	397	54-58	2 1/4	25.98	4.92	9.84	4.25	2.13	30.91	11.73	4.49	18.50	6.61	2.28	397
OWS 14 B	468	60-68	2 1/2	32.87	5.31	10.63	4.76	2.36	38.19	12.99	5.00	19.69	6.93	2.56	606
OWS 15 B	507	72-76	3	39.37	5.91	11.81	5.24	2.99	45.28	14.96	5.75	21.65	9.61	2.76	970
OWS 16 B	689	81-86	3 1/4 - 3	43.31	5.91	11.81	5.51	3.11	49.21	15.63	6.26	26.38	10.24	3.15	1124

MBL = Minimum Breaking Load

- The standard finish of our sockets is blue. Hot dipped galvanized is also available.
- All sockets are provided with an EN 10204-2.1 declaration of conformity, EN 10204-3.1 material certificate and can be provided with a 2006/42/EC declaration where applicable.
- Dimensional tolerances depend on the manufacturing techniques applied and are different between machined components (pins) and cast components (socket bodies and wedges).
- Also surface finish e.g. hot dip galvanizing or even paint may add to the overall thickness and fork distance.
- Please contact Ropeblock for further guidance and a detailed dimensional tolerance sheet.

WARNING
SEE OUR WARNING & SAFETY INFORMATION ON PAGES 134 - 146

SEE OUR WARNING AND SAFETY INFORMATION ON PAGE 134

TAILGRIP OPEN WEDGE SOCKETS WITH PIN

QUENCHED AND TEMPERED CAST STEEL

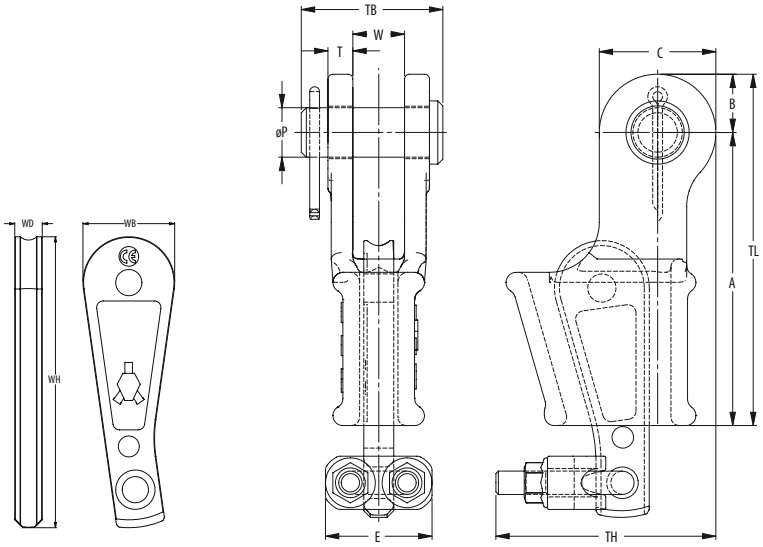

Model No.	MBL (UStons)	for wire ø		Dimensions (inch)													Weight (lbs)
		(mm)	(inch)	A	B	C	E	øP	T	TH	TL	TB	W	WH	WB	WD	
OWS-TG 0.5 P	13	9-10	⅜	5.71	0.91	1.81	1.57	0.81	0.43	2.99	6.61	2.48	0.81	5.12	1.42	0.47	4
OWS-TG 1 P	22	11-13	½	5.75	1.12	2.24	2.17	0.98	0.47	3.94	6.87	2.64	0.98	6.69	1.89	0.55	5
OWS-TG 2 P	28	14-16	⅝	6.93	1.38	2.76	2.52	1.18	0.59	4.92	8.31	3.35	1.22	7.66	2.24	0.71	9
OWS-TG 3 P	44	18-19	¾	8.27	1.57	3.15	2.68	1.38	0.63	5.59	9.84	3.74	1.50	8.74	2.76	0.83	15
OWS-TG 4 P	61	20-22	⅞	9.35	1.87	3.74	2.91	1.61	0.71	6.46	11.22	4.33	1.73	9.86	3.03	0.94	22
OWS-TG 5 P	83	23-26	1	10.83	2.17	4.33	3.31	2.01	0.87	7.44	12.99	5.04	2.01	10.79	3.27	1.08	33
OWS-TG 6 P	99	27-29	1⅛	12.20	2.56	5.12	3.74	2.24	0.98	8.54	14.76	5.59	2.24	11.48	3.58	1.18	46
OWS-TG 7 P	121	30-32	1¼	13.78	2.87	5.75	4.13	2.48	1.10	9.37	16.65	6.10	2.48	13.74	4.25	1.30	68

MBL = Minimum Breaking Load

- The standard finish of our sockets is blue. Hot dipped galvanized is also available.
- All sockets are provided with an EN 10204-2.1 declaration of conformity, EN 10204-3.1 material certificate and can be provided with a 2006/42/EC declaration where applicable.
- Dimensional tolerances depend on the manufacturing techniques applied and are different between machined components (pins) and cast components (socket bodies and wedges).
- Also surface finish e.g. hot dip galvanizing or even paint may add to the overall thickness and fork distance.
- Please contact Ropeblock for further guidance and a detailed dimensional tolerance sheet.

WARNING
SEE OUR WARNING & SAFETY INFORMATION ON PAGES 134 - 146

SEE OUR WARNING AND SAFETY INFORMATION ON PAGE 134

TAILGRIP OPEN WEDGE SOCKETS WITH BOLT AND NUT

QUENCHED AND TEMPERED CAST STEEL

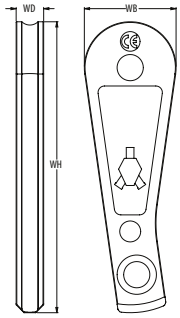

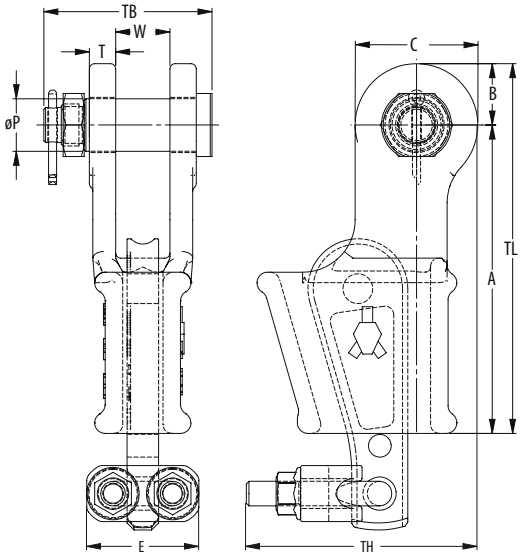

Model No.	MBL (UStons)	for wire ø		Dimensions (inch)													Weight (lbs)
		(mm)	(inch)	A	B	C	E	øP	T	TH	TL	TB	W	WH	WB	WD	
OWS-TG 0.5 B	13	9-10	⅜	5.71	0.91	1.81	1.57	0.81	0.43	2.99	6.61	2.48	0.81	5.12	1.42	0.47	4
OWS-TG 1 B	22	11-13	½	5.75	1.12	2.24	2.17	0.98	0.47	3.94	6.87	2.64	0.98	6.69	1.89	0.55	5
OWS-TG 2 B	28	14-16	⅝	6.93	1.38	2.76	2.52	1.18	0.59	4.92	8.31	3.35	1.22	7.66	2.24	0.71	9
OWS-TG 3 B	44	18-19	¾	8.27	1.57	3.15	2.68	1.38	0.63	5.59	9.84	3.74	1.50	8.74	2.76	0.83	15
OWS-TG 4 B	61	20-22	⅞	9.35	1.87	3.74	2.91	1.61	0.71	6.46	11.22	4.33	1.73	9.86	3.03	0.94	22
OWS-TG 5 B	83	23-26	1	10.83	2.17	4.33	3.31	2.01	0.87	7.44	12.99	5.04	2.01	10.79	3.27	1.08	33
OWS-TG 6 B	99	27-29	1⅛	12.20	2.56	5.12	3.74	2.24	0.98	8.54	14.76	5.59	2.24	11.48	3.58	1.18	46
OWS-TG 7 B	121	30-32	1¼	13.78	2.87	5.75	4.13	2.48	1.10	9.37	16.65	6.10	2.48	13.74	4.25	1.30	68

MBL = Minimum Breaking Load

- The standard finish of our sockets is blue. Hot dipped galvanized is also available.
- All sockets are provided with an EN 10204-2.1 declaration of conformity, EN 10204-3.1 material certificate and can be provided with a 2006/42/EC declaration where applicable.
- Dimensional tolerances depend on the manufacturing techniques applied and are different between machined components (pins) and cast components (socket bodies and wedges).
- Also surface finish e.g. hot dip galvanizing or even paint may add to the overall thickness and fork distance.
- Please contact Ropeblock for further guidance and a detailed dimensional tolerance sheet.

WARNING
SEE OUR WARNING & SAFETY INFORMATION ON PAGES 134 - 146

SEE OUR WARNING AND SAFETY INFORMATION ON PAGE 134

CLOSED WEDGE SOCKETS

QUENCHED AND TEMPERED CAST STEEL

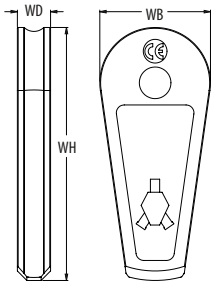

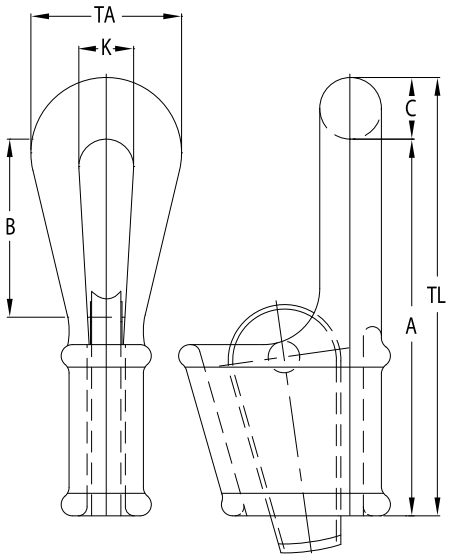

Model No.	MBL (UStons)	for wire ø		Dimensions (inch)									Weight (lbs)
		(mm)	(inch)	A	B	C	K	TA	TL	WH	WB	WD	
CWS 303	44	18-19	¾	8.66	3.94	1.34	1.57	3.54	10.00	6.30	2.76	0.83	15
CWS 304	61	20-22	⅞	8.86	4.92	1.65	1.85	4.33	10.51	7.34	3.03	0.94	20
CWS 305	83	24-26	1	11.42	5.12	1.97	2.17	4.92	13.39	8.33	3.27	1.08	31
CWS 306	99	27-29	1⅛	12.80	5.71	2.36	2.76	5.98	15.16	9.11	3.58	1.18	49
CWS 307	121	30-32	1¼	14.17	6.30	2.68	2.95	6.50	16.85	10.47	4.25	1.30	66
CWS 308	138	34-36	1⅜	15.75	7.09	2.68	2.95	6.50	18.43	11.73	4.57	1.38	84
CWS 309	165	37-39	1½	19.69	9.45	2.83	3.15	7.28	22.52	13.31	5.12	1.50	108
CWS 310	187	40-42	1⅝	23.62	12.20	3.15	3.54	8.27	26.77	14.67	5.51	1.61	143
CWS 311	248	43-48	1¾ - 1⅞	25.20	12.80	3.54	3.94	8.86	28.74	16.06	5.75	1.89	220
CWS 312	309	49-52	2	28.35	14.76	3.94	4.33	9.65	32.28	17.72	6.30	2.09	331
CWS 313	397	54-58	2¼	30.51	15.75	4.33	4.72	10.43	34.84	18.50	6.61	2.28	353
CWS 314	468	61-64	2½	35.43	18.50	4.92	5.12	11.81	40.35	19.69	6.93	2.56	507
CWS 315	507	72-76	3	39.37	16.73	5.12	5.91	12.99	44.49	21.65	9.61	2.76	794
CWS 316	689	81-86	3¼ - 3⅜	44.29	21.65	5.31	6.50	14.17	49.61	26.38	10.24	3.15	937

MBL = Minimum Breaking Load

- The standard finish of our sockets is blue. Hot dipped galvanized is also available.
- All sockets are provided with an EN 10204-2.1 declaration of conformity, EN 10204-3.1 material certificate and can be provided with a 2006/42/EC declaration where applicable.
- Dimensional tolerances depend on the manufacturing techniques applied and are different between machined components (pins) and cast components (socket bodies and wedges).
- Also surface finish e.g. hot dip galvanizing or even paint may add to the overall thickness and fork distance.
- Please contact Ropeblock for further guidance and a detailed dimensional tolerance sheet.

WARNING
SEE OUR WARNING & SAFETY INFORMATION ON PAGES 134 - 146

SEE OUR WARNING AND SAFETY INFORMATION ON PAGE 134